Product Data Sheet

CRB6023C IR Camera with Cable Management Bracket (25M)

Image

Dimension

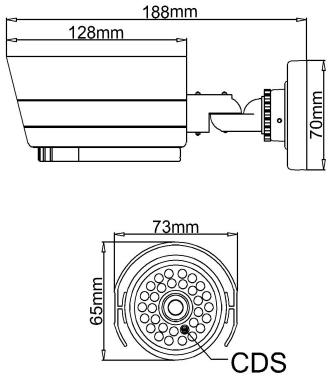

Features

- 1/3" Sony Super HAD CCD
- 420 TVL
- 30 pcs Φ5 IR LEDs
- IR Distance 25m
- IP 66 with Weather Proof Shield
- Under 10 lux Auto Switched IR LEDs by CDS
- Electronic Day /Night
- Cable Management: Cable Through Bracket
- Vandal Resistant Concealed Cable Base

Specification

Model	SE-CRB6023C
Pick-up Device	1/3" Sony Super HAD CCD
Effective Pixels (H×V)	NTSC:510×492, PAL:500×582
Sensing Area	4.9×3.7mm
Horizontal Resolution	420 TV Lines
Minimum Illumination	0.5 Lux, 0 Lux at IR on
S/N Ratio	More than 48dB
Scanning System	2:1 Interlace
Synchronous System	Internal
Electronic Shutter	NTSC:1/60s～1/100,000s, PAL:1/50s～1/100,000s
IR Distance	25m
IR Leds	30 pcs 850nm Infrared LED
IR status	IR on: under 10Lux, by CDS Auto Control
Water Resistance	IP66
Gama Characteristic	0,45
Auto Gain Control	Auto
White Balance	Auto
Video Output	1.0 Vp-p Composite Video, 75Ω
Lens	6mm Board Lens (2.8/4/6/8mm Optional)
Power Supply	12V DC
Power Consumption	IR on: 320mA, IR off: 80mA
Operating Environment	-10 ℃~+50 ℃, RH95% Max
Dimension(L×W×H)	188×73×70mm
Weight	500g
Package	25 pcs /Carton, 51.5×39×37cm

Delta Dynamics Technology Co., Ltd.

※ The specifications are subject to be changed without notice.